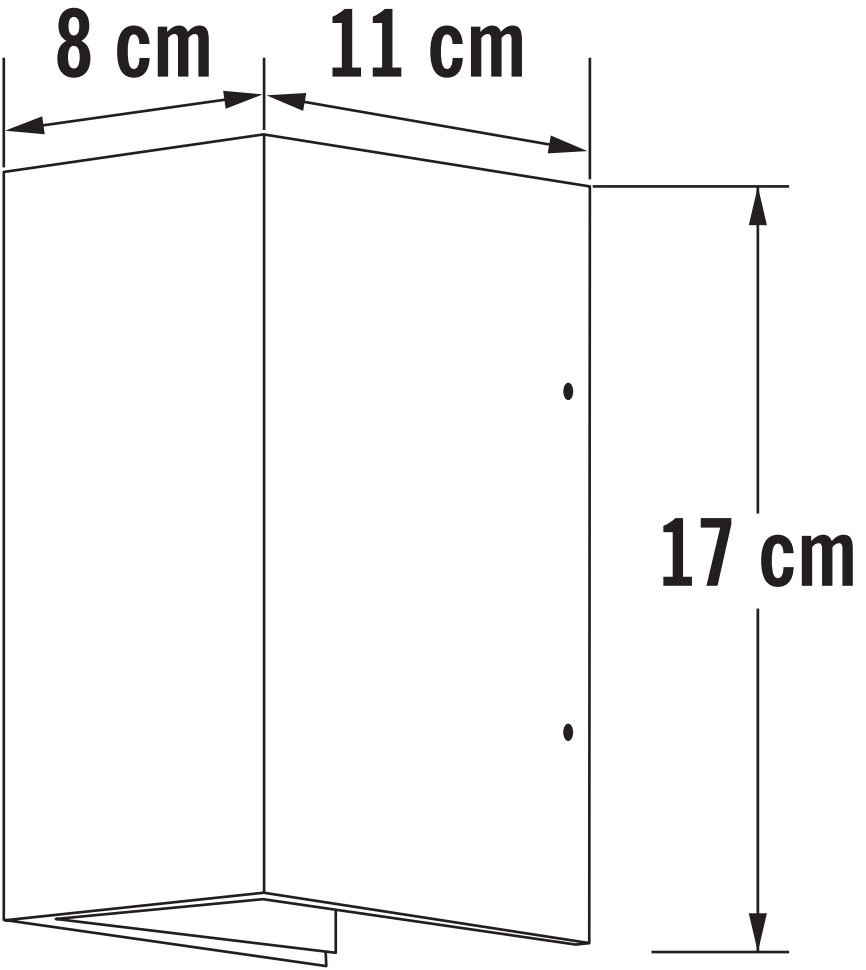
8 cm
11 cm
17 cm